Model 160T
Smart Differential Pressure Transmitters

Based on silicon piezoresistive technology, 160T smart differential pressure transmitters are made from BCM 160M multi-functional differential pressure modules. Model 160T offers an easy solution for measuring differential pressure and system (also called line, static) pressure at the same time. The medium temperature measurement function is available on request.

Featuring a full stainless steel housing, 316L SS isolating diaphragm and standard assembly ports, the 160T differential pressure transmitters provide a reliable solution for differential pressure measurements in rugged industrial applications.

The differential measuring range of 160T transmitters ranges from 0~0.4 bar to 0~10 bar. These transmitters provide amplified output signals of 4~20mA with HART protocol. They are also equipped with a configurable 4½ digits LCD display. The measuring accuracy of 160T is up to 0.2%fs (fs = full scale). 160T transmitters can operate under a system (line or static) pressure up to 160bar, with low system pressure effect down to 0.5%fs.

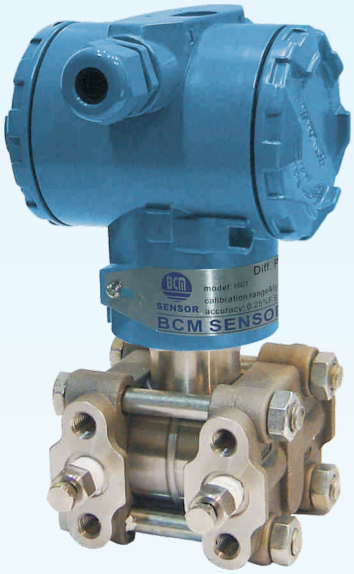

Features

- measure diff. and system pressure at the same time
- temperature measurement: option on request
- diff. pressure ranges: 0~0.4bar, ..., 0~10bar
- line pressure ranges: 50bar (ΔP=0.4bar), 160bar (ΔP>0.4bar)
- output signals: 4~20 mA with HART protocol
- display: 4½ digits LCD display
- Z & S adjustability: zero and span adjustment available inside
- accuracy: 0.2%fs (standard)
- materials: 316L SS (isolating diaphragm); 316 SS (flanges)
- construction: rigid, welded encapsulation

Dimensions

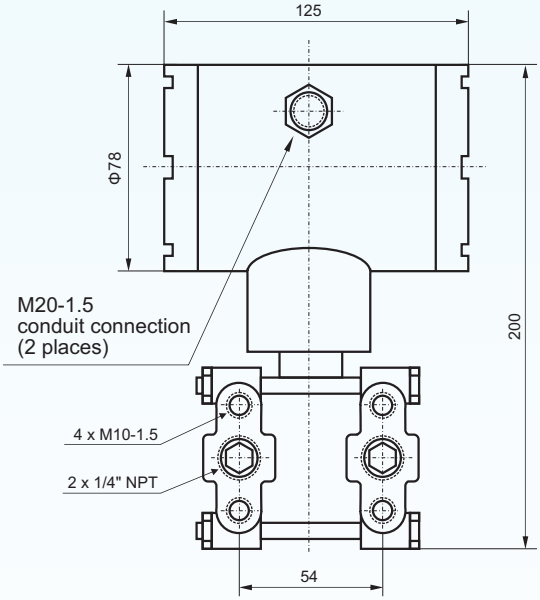

Electric connections

for diff. pressure:

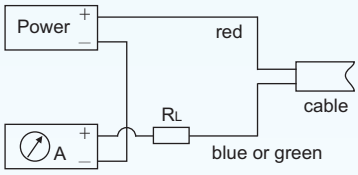

for system pressure:

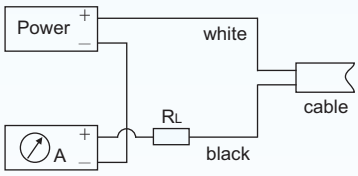

BCM SENSOR TECHNOLOGIES BVBA

Industriepark Zone 4, Brechtsebaan 2
B-2900 Schoten - Antwerpen, BELGIUM

Tel.: +32-3-238 6469
Fax: +32-3-238 4171

website: www.bcmsensor.com
email: sales@bcmsensor.com

Model 160T
Smart Differential Pressure Transmitters

BCM SENSOR

Technical Data

parameters pressure media	units	specifications gases, oils or dilute liquids which are compatible with the materials of pressure diaphragm and flange	
pressure ranges and type	bar, D	0~0.4	0~1, 0~4, 0~10
	bar, A	0~50	0~160
maximum system pressure (for diff. meas.)	bar	50	160
overload pressure (diff.)	bar	50	160
power supply	Vdc	24 (recommended), 12, ..., 36	
output signal		4~20mA with HART protocol	
accuracy* (diff. pressure)	%fs	⩽ ±0.2 (standard), ⩽ ±0.5	
accuracy (abs. pressure)	%fs	⩽ ±0.25 (standard), ⩽ ±0.5	
system pressure effect on diff. pressure	%fs/bar	⩽ ±0.01	
long-term stability of zero	%fs/year	⩽ ±0.2	
life time	cycle	10^8	
response time	ms	<2	
load resistance	Ω	250~1150	
storage temperature range	°C	-40 ~ +90	
operating temperature range**	°C	-30 ~ +80	
compensated temperature range	°C	0 ~ +70	
temperature coefficient of span	%fso/°C	⩽ ±0.03	
temperature coefficient of zero	%fso/°C	⩽ ±0.03	
process connection	thread	1/4" NPT (female)	
electrical connection	inner thread	M20x1.5 (standard), 1/2 NPT	
materials: membrane		316L SS	
materials: flange		316 SS	
materials: housing for electronics		casting aluminum	
environment protection		IP66	
display meter		4½ LCD digital meter	
net weight	gram	4000	

*: For diff. pressure of 0.4bar, the standard accuracy is 0.5%fs.
**: Medium temperature measurement function can be provided on request.

The listed specifications are subject to change without prior notice.

How to order: model - diff. range (type), accuracy - system range (type), accuracy, system pressure effect - output - process connection - electrical connection - customer specific requests

ordering code example: 160T-10barD,0.25%fs-100barA,0.25%fs,0.5%fs-4/20mA with HART-1/4"NPT-M20x1.5

BCM SENSOR TECHNOLOGIES BVBA

Industriepark Zone 4, Brechtsebaan 2
B-2900 Schoten - Antwerpen, BELGIUM

Tel.: +32-3-238 6469
Fax: +32-3-238 4171

website: www.bcmsensor.com
email: sales@bcmsensor.com